11. CLUTCH CARRIER ASSY

1 906 kr
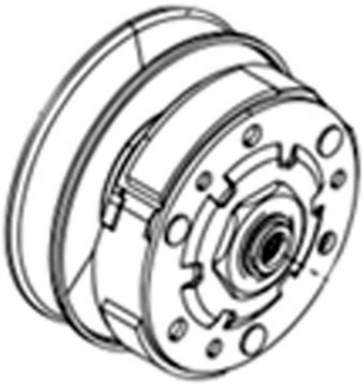
Product Images