1. Speedometer assy

6 827 kr
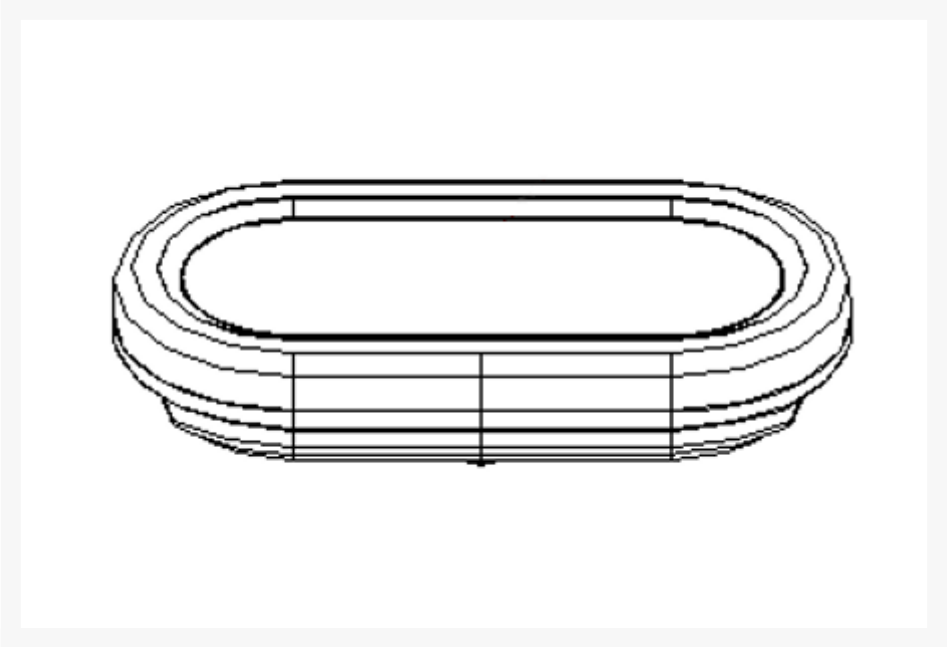
Product Images